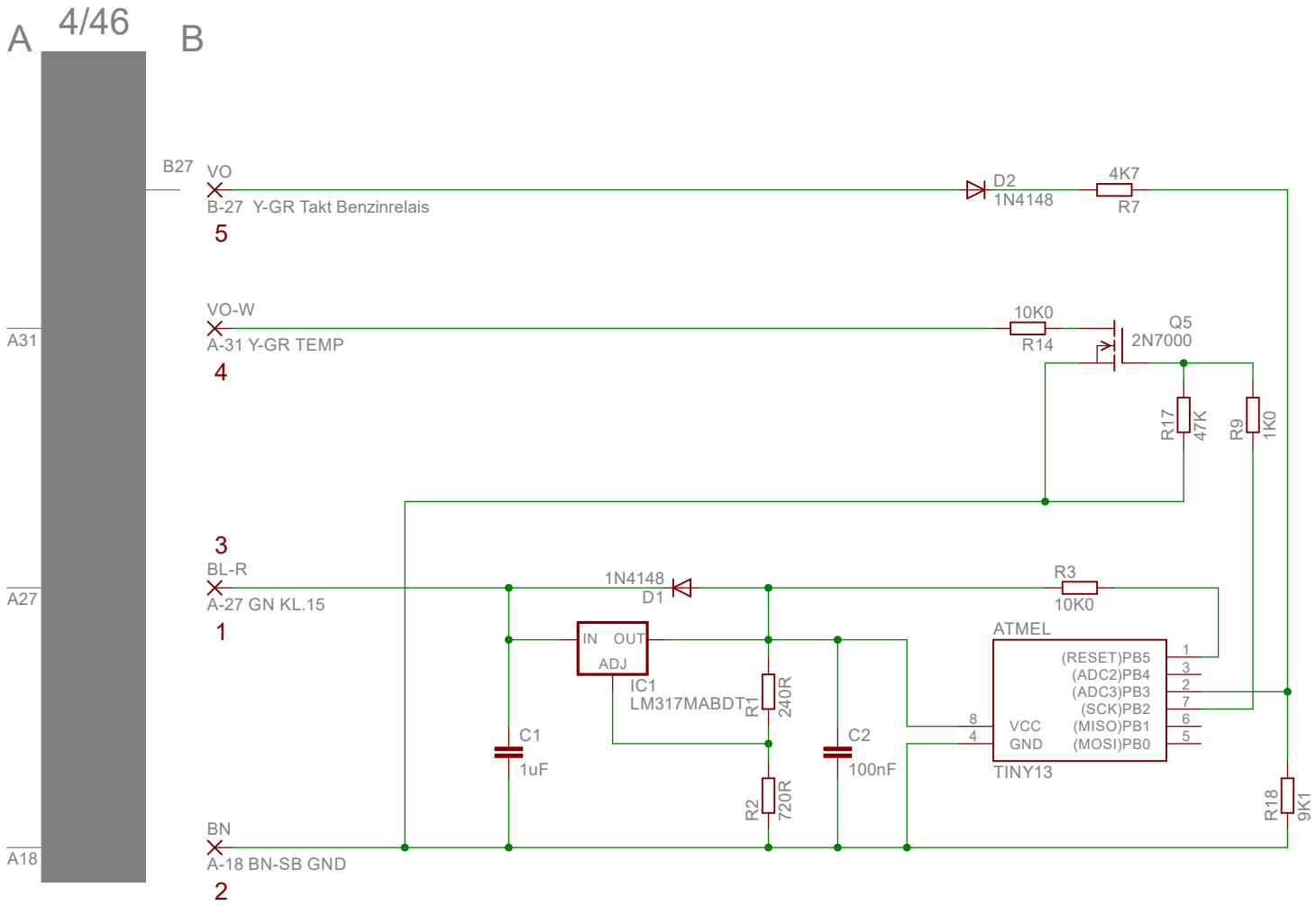

06.04.2022 20:47:54 E:\850_ECT_Mod\850_ECT.sch (Sheet: 1/1)